9. CALIBRATION

9.1 COMPASS CALIBRATION

Compass calibration is required before the first time flight, otherwise the system may not work properly. The compass is very sensitive to electromagnetic interference which can cause abnormal compass data and lead to poor flight performance or even flight failure. Regular calibration enables the compass is in optimum performance.

- Do not calibrate the compass in a strong magnetic field
- Do not carry ferromagnetic materials with you while calibrating the compass, such as keys, cell phones, etc.

COMPASS CALIBRATION PROCEDURES

Please follow the calibrating procedures before the first flight.

1) Push the left stick to the most left side, and move the right stick left to right quickly until the transmitter displays "Calib compass 1"

2) Rotate the X4 horizontally clock-wise until the LCD screen displays " Calib compass 2"

3) Put the X4 nose down and rotate it vertically clock-wise until the " Calib compass 2" on screen disappears.

4) Calibration done.

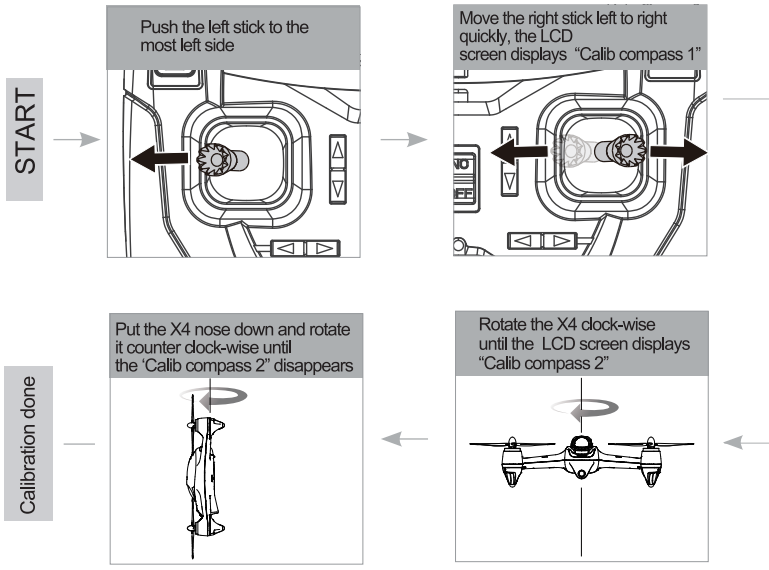

©2016 Hubsan

9.2 HORIZONTAL CALIBRATION

Horizontal calibration is required when the X4 is drift during flight.

Please follow the calibrating procedures:

1) Push the left stick to the most right side, and move the right stick left to right quickly until the 4 LED indicators blink in yellow slowly.

2) Calibration succeeded when the 4 LED indicators stop blinking slowly.

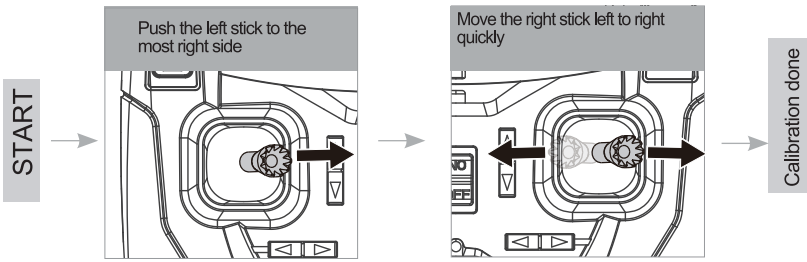

9.3 ROTATION CALIBRATION

Rotation calibration is required when the X4 is yaw during flight.

Please follow the calibrating procedures and be sured that the X4 always on horizontal surface:

1) Push the left stick to the top side, and move the right stick up and down quickly until the 4 LED indicators blink in yellow slowly

2) When the 4 LED indicators turns into red and blink circularly, rotate the X4 horizontally clock-wise until the 4 LED indicators remain lighted in green

3) When the 4 LED indicators turns into red again, rotate the X4 horizontally clock-wise until the 4 LED indicators explosion-flashing simultaneously

4) Calibration done

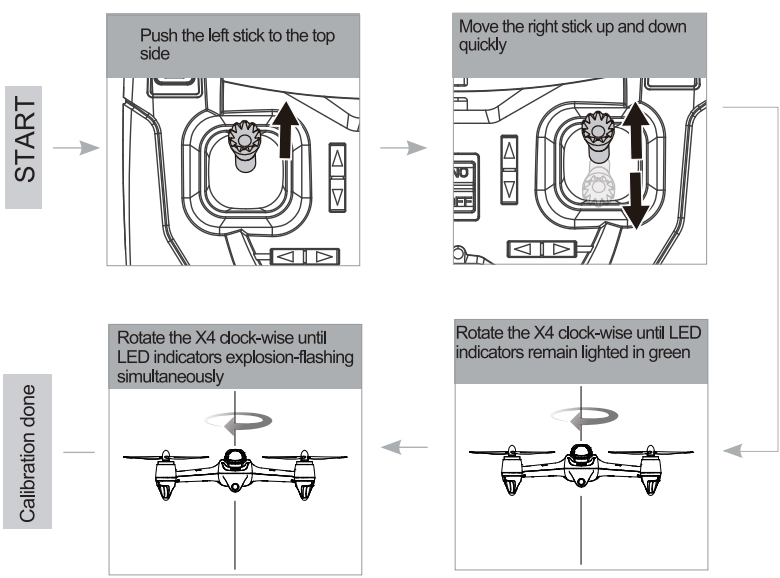

©2016 Hubsan

10. TRANSMITTER STICK CALIBRATION

Mode 2: Push both sticks to the upper left corner and power on the transmitter simultaneously, the LCD will display “Calibrate Stick Mode 2”, rotate both sticks in circles for three times, release both sticks, then press any trim for 1.5 seconds until one “beep” heard which indicates a successful calibration.

Mode 1: Push the left stick to the upper left corner and the right stick to the upper right corner and power on the transmitter simultaneously, the LCD will display “Calibrate Stick Mode 1”, rotate both sticks in circles for three times, release both sticks, then press any trim for 1.5 seconds until one “beep” heard which indicates a successful calibration.

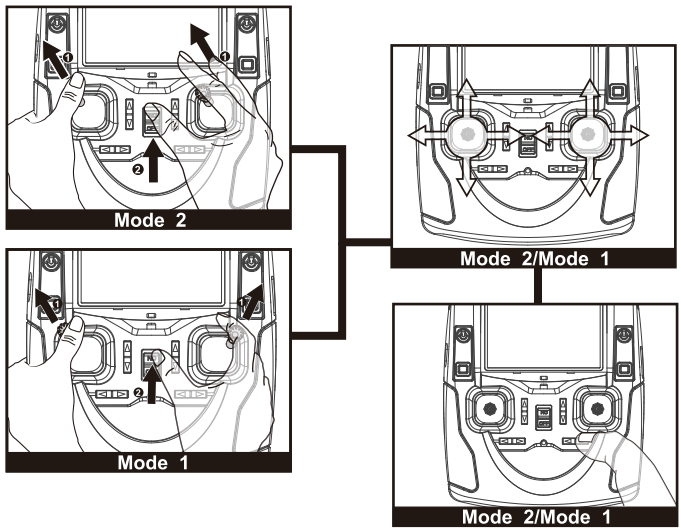

⚠ The transmitter mode can be shifted according to the above operation.

11. FREQUENCY SELECTABLE 5.8GHZ

The transmitter will automatically find the best frequency to ensure a live video with good quality of transmission. Please re-select the frequency from 5730MHZ to 5845MHZ to get a better video transmission when necessary.

Pull the throttle stick to the lowest position and press the Elevator stick for 1.5 second to enter into the MAIN MENU interface. Push the Elevator stick up/down to select “5.8G Frequency”, push the stick to the right to enter into the “ 5.8G frequency” interface, select a matched frequency.

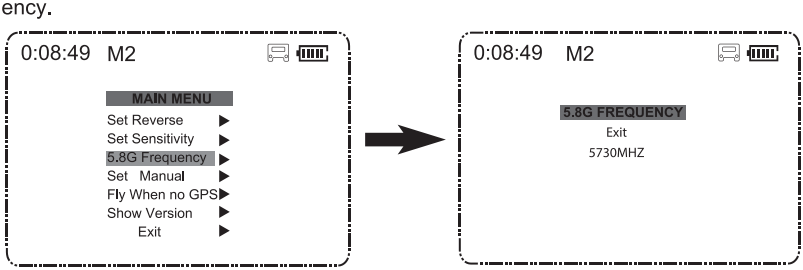

©2016 Hubsan

EXPLODED VIEW

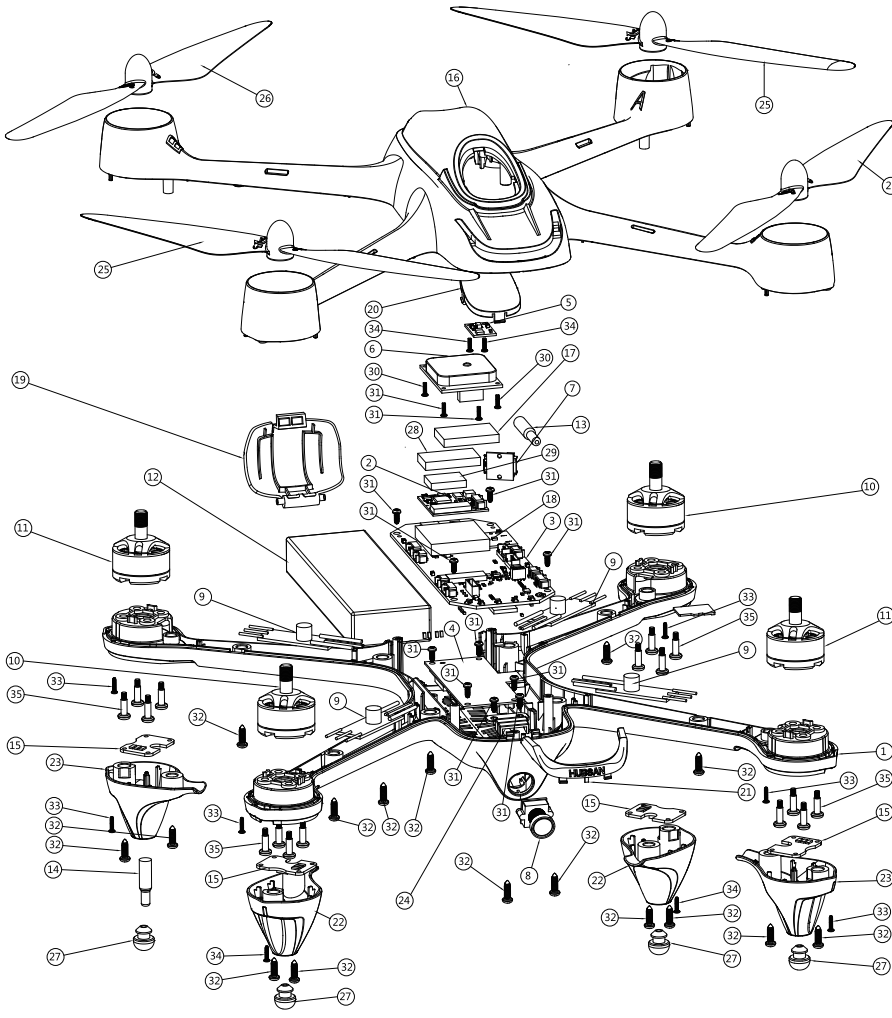

©2016 Hubsan

NO.	PART NAME	QTY
01	Lower Body Shell	1
02	Main Control Board	1
03	Power Board	1
04	5.8 GHz Transmission PCBA	1
05	Compass PCBA	1
06	GPS Module	1
07	USB PCBA	1
08	Camera Module	1
09	ESC	4
10	Motor A	2
11	Motor B	2
12	Li-Po Battery	1
13	2.4G Attenna	1
14	5.8G Attenna	1
15	LED PCBA	4
16	Upper Body Shell	1
17	2.4GHz Shielding Case	1
18	Sponge	1

NO.	PART NAME	QTY
19	Battery Cover	1
20	Canopy	1
21	Eye Lampshade	1
22	Motor A Lampshade	2
23	Motor B Lampshade	2
24	Lens Holder	1
25	Propeller A	2
26	Propeller B	2
27	Rubber Feet	4
28	Shielding Case	1
29	Sponge	1
30	Screw	4
31	Screw	10
32	Screw	16
33	Screw	8
34	Screw	2
35	Screw	16

©2016 Hubsan

H501S SPARE PART CHART

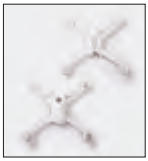

H501S-01
Body Shell Set- White

H501S-22
Body Shell Set- Black

H501S-02B
Battery Cover- Black

H501S-02
Battery Cover- White

H501S-03
Canopy

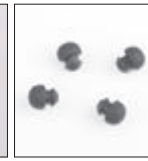

H109-04
Rubber Feet

H501S-04
Screw Set

H501S-05
Propeller A- Gold

H501S-06
Propeller B- Gold

H501S-05B
Propeller A- Black

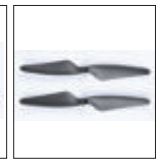

H501S-06B
Propeller B- Black

H501S-07
Brushless Motor A

H501S-08
Brushless Motor B

H501S-09
PCB Module

H501S-10
Flight Control PCB Module

H501S-11
5.8G Transmission Module

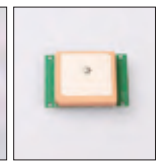

H501S-12
GPS Module

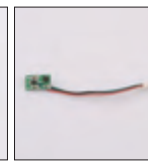

H501S-13
Compass Module

H501S-14
Lipo Battery 2700MAh

H501S-15
Remote

H301S-11
Adapter

H301S-12
Balance Charger

H501S-16
U Wrench

H501S-17
Eye Lampshade

H501S-18
Motor LED Lampshade

H501S-19
ESC

H501S-20
LED PCBA

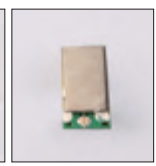

H501S-21
2.4G Receiver Module

H501S-25
TX Battery

H501S-27
High-edition controller

©2016 Hubsan

FCC INFORMATION

This equipment has been tested and found to comply with the limits for a Class B digital device, pursuant to Part 15 of the FCC Rules. These limits are designed to provide reasonable protection against harmful interference in a residential installation. This equipment generates, uses, and can radiate radio frequency energy and, if not installed and used in accordance with the instructions, may cause harmful interference to radio communications. However, there is no guarantee that interference will not occur in a particular installation. If this equipment does cause harmful interference to radio or television reception, which can be determined by turning the equipment off and on, the user is encouraged to try to correct the interference by one or more of the following measures:

• Reorient or relocate the receiving antenna.

• Increase the separation between the equipment and receiver.

• Connect the equipment into an outlet on a circuit different from that to which the receiver is connected.

• Consult the local dealer or an experienced radio/TV technician for help.

Changes or modifications not expressly approved by the party responsible for compliance could void the user's authority to operate the equipment.

This device complies with Part 15 of the FCC Rules. Operation is subject to the following two conditions: (1) this device may not cause harmful interference, and (2) this device must accept any interference received, including interference that may cause undesired operation.

ENVIRONMENTALLY FRIENDLY DISPOSAL

Old electrical appliances must not be disposed of together with the residual waste, but have to be disposed of separately. The disposal at the communal collecting point via private persons is for free.
The owner of old appliances is responsible to bring the appliances to thise collecting points or to similar collection points. With this little personal effort, you contribute to recycle valuable raw materials and the treatment of toxic substances.

Electrical and electronic equipment that are supplied with batteries (including internal batteries)

WEEE Directive & Product Disposal

At the end of its serviceable life, this product should not be treated as household or general waste. It should be handed over to the applicable collection point for the recycling of electrical and electronic equipment, or returned to the supplier for disposal.

Internal / Supplied Batteries.

This symbol on the battery indicates that the battery is to be collected separately.
This battery is designed for separate collection at an appropriate collection point.

User manual is subject to change without prior notice due to unforseen product upgrades.

Download the latest user manual from

WWW.HUBSAN.COM

VERSION 1.3 EN