Ages 14+
READ THE INSTRUCTION MANUAL CAREFULLY
PLEASE VISIT WWW.HUBSAN.COM TO UPGRADE

THE HUBSAN X4 FPV BRUSHLESS

ITEM NO: H501S
FLY WHEN NO GPS SETUP, SEE CAUTION ON PAGE 02
ARM/DISARM MOTORS, SEE PAGE 06
RTH FUNCTION, SEE PAGE 09-10
FOLLOW ME FUNCTION, SEE PAGE 10-11
COMPASS CALIBRATION, SEE PAGE 16
TRANSMITTER CALIBRATION, SEE PAGE 18

Hubsan FPV X4 Brushless

V1.3 2016.06

Please read the instruction manual carefully!

⚠ CAUTION:

For safety, the quadcopter is default set to CAN NOT FLY WHEN NO GPS. If you prefer to fly when GPS is not available, please reset the value as instructed below before using.

Pull the throttle stick to the lowest position and press the Elevator stick for 1.5 seconds to enter into the MAIN MENU interface. Push the Elevator stick up/down to select “Fly When no GPS”, push the stick right to enter into the “ Fly When no GPS” interface, select “YES”.
The Default Setting is “NO”.
Select “Exit” to exit.

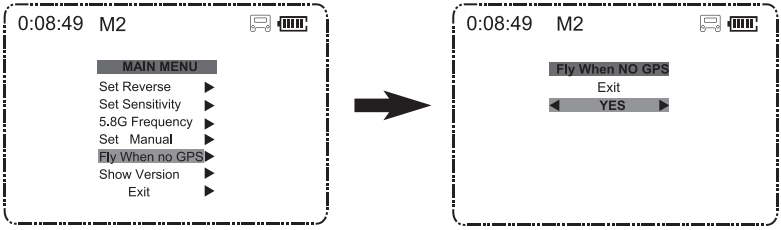

IMPORTANT SAFETY NOTES

OPERATION:

Be extremely careful and responsible when using the drone. Small electronic components can be damaged by crashing or by dropping the X4 into water. To avoid further damages, please replace broken parts immediately.

Flight:

- Take responsiblity for the safety of yourself and others when flying the X4 !
- Do not fly the X4 in crowded places.
- Do not fly in bad weather.
- Never try to catch the X4 while it is in flight.
- This model is intended for experienced pilots age 14+.
- Power off the X4 after flight to prevent the propellers from causing injuries.
- Always remove the battery after you stop flying to avoid injuries from accidentally powering on the motors.
- Always take great caution to protect yourself when near the propellers. The flight system will start after powering on regardless of the transmitter signal. The high speed propellers are very dangerous.
- Power off the X4 after every flight, otherwise the propellers may still rotate and cause injury.

©2016 Hubsan

INTRODUCTION

Thank you for buying the HUBSAN products. It is designed as an easy-to-use, multi-functional RC model, capable of hovering, fast forward and acrobatic flight maneuvers. Please read the manual carefully and follow all the instructions. Be sure to keep the manual for future reference.

Quadcopter Weight: 435g(including battery)

FPV: First Person View Function enables you to experience every live moment of the flight from the drones's point of view.

1. ITEMS INCLUDED IN THE BOX

Check all the items in the box before use.

S/N	Part Name	Photos	Q'ty	Remarks
1	Quad copter	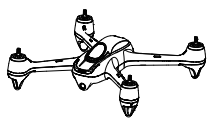	1PC	Equipped with smart flight controller,GPS and compass
2	Propellers	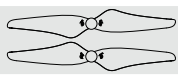	8PCS	Propeller A 4pcs, Propeller B 4pcs
3	Transmitter		1PC	FPV Transmitter, equipped with 4 X AA battery (Not included)
4	7.4V LiPo battery	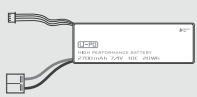	1PC	For quad copter
5	LiPo Balance charger	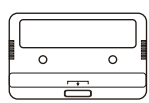	1PC	For recharging the LiPo battery
6	LiPo Charger Adapter	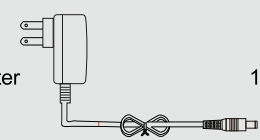	1PC	110-240V
7	Assistant wrench		1PC	For removing propellers
8	User Manual	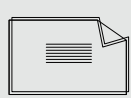	2PCS	Disclaimer Hubsan X4 Instruction Manual

©2016 Hubsan

2. QUAD COPTER MOTOR LED INDICATOR

Indicator Status:

1. Power on: 4 white LED indicators blink simultaneously every 1.5 seconds.
2. Compass Calibration:
   1). Horizontal calibration: 4 red LED indicators blink circularly.
   2). Vertical calibration: 4 green LED indicators blink circularly.
3. GPS Flight: 4 LED indicators remain blink. .
4. GPS Return : 2 front LED blink in white, 2 back LED blink in blue.
5. Altitude Hold: 2 front LED blink in white, 2 back LED blink in yellow.
6. Position Hold: 2 front LED blink in white, 2 back LED blink in green.
7. Low Voltage: 2 front LED blink in white, 2 back LED blink in red.
8. LED indicators can be turned off by long pressing the lower Throttle Trim on transmitter.

3. QUAD COPTER BATTERY

3.1 INTRODUCTION

The quad copter battery is rechargeable with 2700mAh capacity and 7.4V voltage.
The battery should ONLY be charged with the HUBSAN charger to avoid overcharge.

3.2 INSTALL THE BATTERY

Push the battery into the battery compartment correctly and connect the battery plugs with the correct polarity.
Close the battery compartment cover.

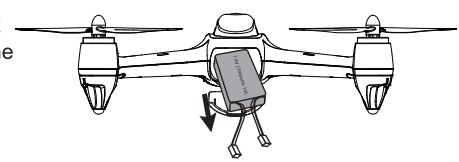

3.3 CHARGING

Connect the battery to the balance charger and wall charger. The balance charger indicator is solid red when charging and turns to solid green when the battery is fully charged.
It takes around 210 minutes to get the battery fully charged.

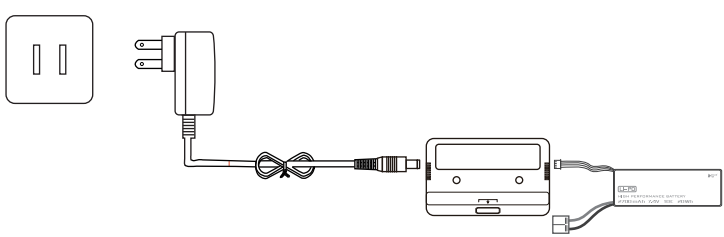

⚠ Please fully charge the batteries to avoid loss of control due to low voltage.
Risk of explosion if battery is replaced by an incorrect type.
Dispose of used batteries according to the local regulations.

©2016 Hubsan

4. QUAD COPTER UPGRADE

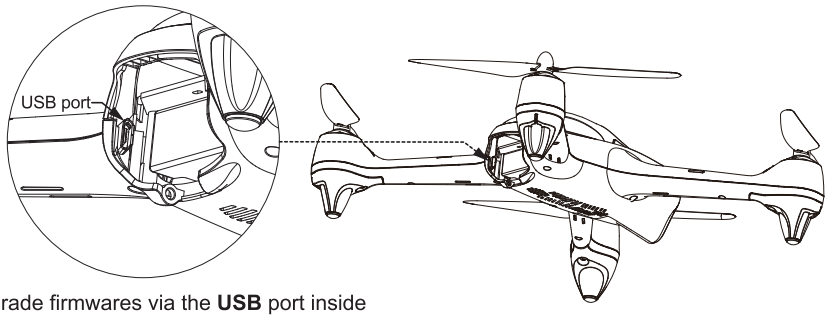

Upgrade firmwares via the **USB** port inside battery compartment.

5. PROPELLER

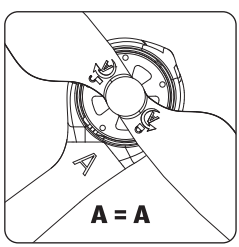

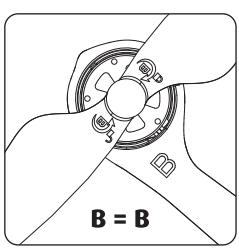

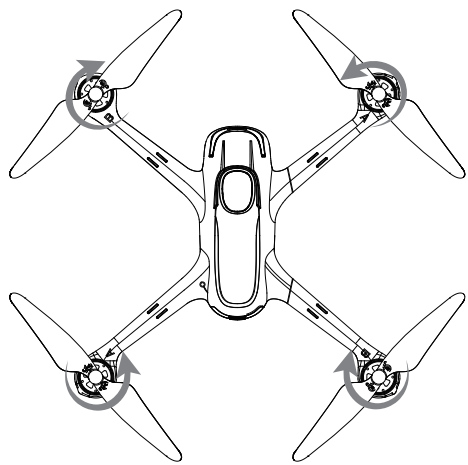

Attach the propellers to the corresponding motors that are marked A and B,tighten the propellers and keep the motors deadlocked with the U wrench.

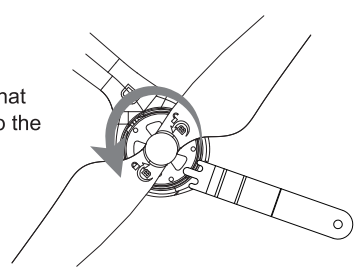

⚠ ● Make sure that the A and B propellers are installed correctly. The X4 will not fly if propellers are improperly installed.

● Hazardous moving parts keep fingers and other body part away.

©2016 Hubsan

6. START TO FLY

6.1 FLIGHT ENVIRONMENT

(1) The flying area should be open and without tall buildings or other obstacles; the steel structure within buildings interferes with the compass and the GPS signal.

(2) DO NOT fly in bad weather such as strong wind, heavy snow, rain or fog.

(3) Keep away from barriers, people, power cables, trees, and other obstructions.

(4) Do NOT fly near radio towers or airports.

(5) The X4 control system will not work properly at the South or North Pole.

(6) DO NOT fly in restricted areas and obey your country's laws and regulations.

High Tension Line

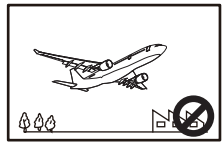

Airport

Interference

Rain

6.2 BINDING

The binding is completed in factory.

For re-binding, press Photo button and power on the transmitter simultaneously until “Bind to Plane” displayed, then power on the drone, and place it very close to the transmitter, the binding will be completed after one “ beep” heard.

Should the binding failed, please power off the drone and repeat above steps.

6.3 ARM/ DISARM THE MOTORS

Arm the motors

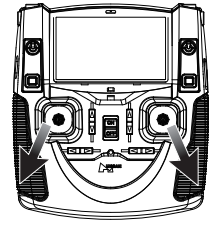

Method : Pull the left stick to the left lowest corner and the right stick to the right lowest corner as the picture shows. Release both sticks after the motors are armed.

Disarm the motors

Method : Pull the left stick to the left lowest corner and the right stick to the right lowest corner again, and release both sticks after the motors are disarmed.

⊘ Do not stop the motors during the flight to avoid crashing.

Push the sticks lightly. Release the sticks after the motors are armed or disarmed.

©2016 Hubsan

6.4 BASIC FLIGHT

The operation mode for the transmitter including Mode 1 or Mode 2. The manual will use Mode 2 as an example to illustrate the transmitter's operation.

Transmitter (Model 2)	X4	Remarks
	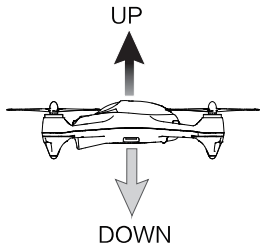	The throttle stick controls the ascent and descent . Push up the stick and the X4 will ascend. Pull down the stick and the X4 will descend. When the stick is in the center, the X4 will hover and hold its alititude automatically . Move the throttle stick above the center position to take off. (Move the stick gradually to prevent the X4 from ascending too quickly.)
	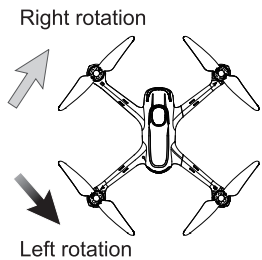	The Rudder stick controls the rotate direction Push the stick to the left and the X4 will rotate counter-clockwise Push the stick to the right and the X4 will rotate clockwise. When the stick is in the center,the X4 will keep the current direction and not rotate. Pushing harder will cause the X4 to rotate faster in the corresponding directions.
	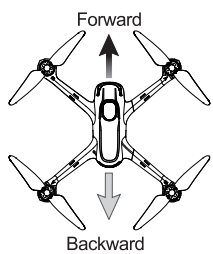	The Elevator stick moves the X4 forward and backward. Push the stick up the and the X4 will fly forward. Pull the stick down and the X4 will fly backward. When the stick is in the center, the X4 will hold its position. The angle of stick movement corresponds to the angle of tilt and flight speed.
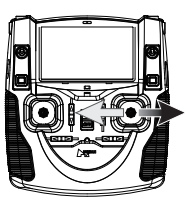	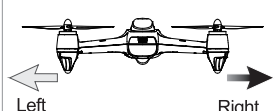	The Aileron stick controls left and right flight. Push the stick to the left and the X4 will fly to the left. Push the stick to the right and the X4 will fly to the right. The X4 will keep the current status when the stick is in the center. The angle of stick movement corresponds to the angle of tilt and flight speed.

©2016 Hubsan

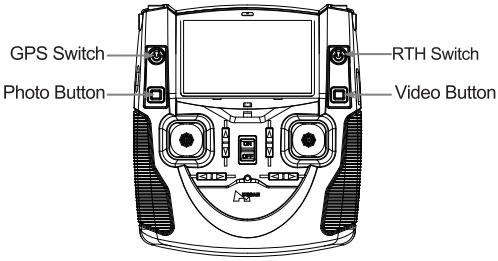

Important Note: The GPS and RTH functions are only available outdoors.Please make sure the two switches keep downward when indoors.

The GPS Switch controls the position-hold function.

In position 1 (up), the GPS function works.

In position 2 (down), the GPS function is inactive.

The RTH Switch controls the automatic return home function.

In position 1 (up), the RTH function works.

In position 2 (down), the RTH function is inactive.

For the Photo/Video function, always power off the quadcopter and the transmitter when inserting or removing the SD card

6.5 PHOTO/VIDEO

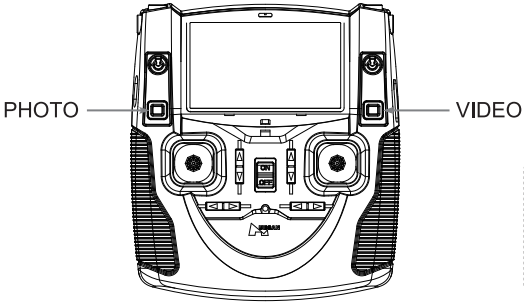

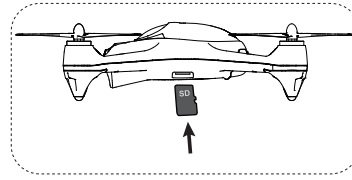

Insert the SD card into quadcopter before using Photo/Video function.

Press the Photo/Video button for 0.5 second to take photos.

Press the Photo/Video button for 0.5 second to take videos and press again to save the videos.

⚠ Stop recording before the SD card is removed.

©2016 Hubsan

7. ADVANCED PERFORMANCE SETUP

7.1 GPS POSITIONING/ HOME POINT SETTING

1.) GPS Positioning works ONLY when the GPS signal has no less than 6 satellites.

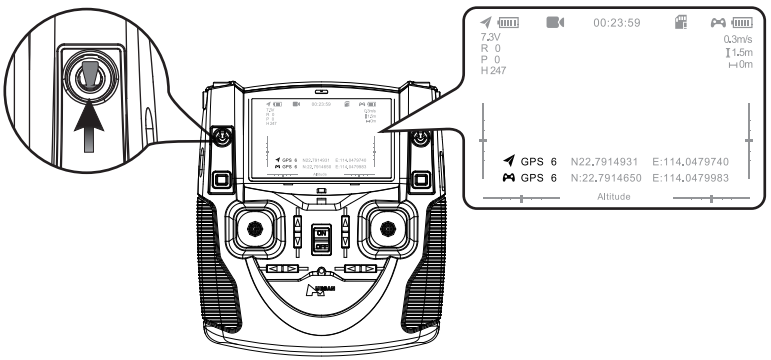

Push up the GPS switch to activate the GPS positioning.

Pull down the GPS switch to exit the GPS positioning (only altitude hold will be active).

2.) Home Point is recorded when armed the motors with no less than 6 GPS satellites.

3.) You should be in an open place to search for the GPS satellites, it'll take 3 mins to finish the searching, and the GPS signal strength depends on the flying environment.

7.2 RTH MODE (RETURN TO HOME)

ENTER INTO RTH MODE

Push the GPS Switch and the RTH Switch up, and the quad copter will enter into RTH mode. The flight control system will control the quad copter to fly back to the home point and land automatically.

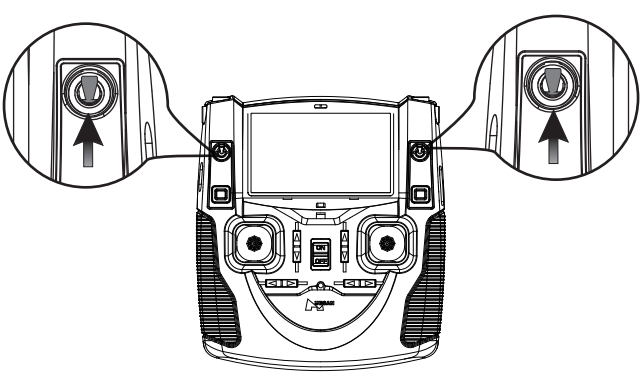

⚠ The RTH MODE only works when the GPS mode is activated with no less than 6 satellites. The Home Point is recorded when armed the motors with no less than 6 GPS satellites.

©2016 Hubsan

EXIT RTH MODE

Pull down the RTH Switch, the X4 will exit the RTH Mode.

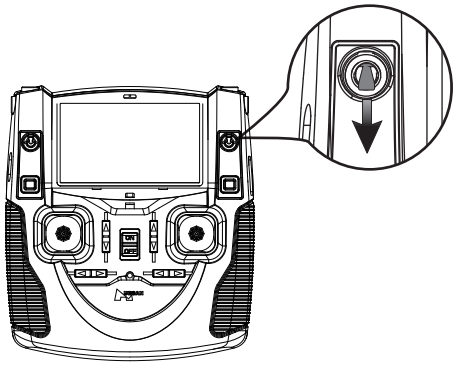

7.3 HEADLESS MODE

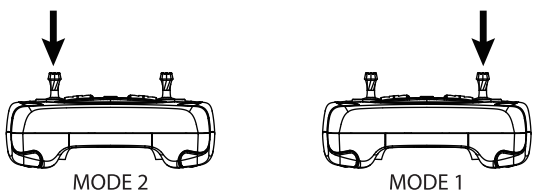

Headless mode means the X4 will default any directions (corresponding to the directions of transmitter sticks) as the up ahead when the mode is activated.

Press the Throttle stick 0.5 second to switch on/ off headless mode.

Press the stick to enter into Headless Mode, indicated by two "beep" sounds and the “HEADLESS ON” displays on the LCD.

Press the stick again to exit Headless Mode, indicated by one "beep" sound and the ”HEADLESS OFF” displays on the LCD.

7.4 FOLLOW ME MODE

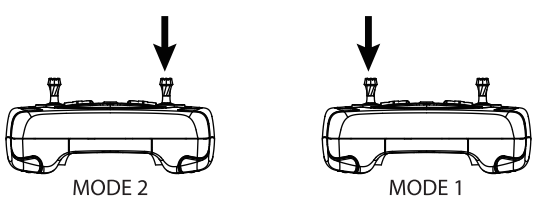

Follow Me Mode means the drone follows the transmitter automatically as it has built-in GPS system.

©2016 Hubsan

Press the Elevator stick for 0.5 second to switch on/ off follow me mode.

Press the stick to enter into the follow me Mode, indicated by two "beep" sounds, the " FOLLOW ON" displays on the LCD and the drone will turn and face the transmitter.

Press the stick again to exit follow me Mode, indicated by one "beep" sound and the " FOLLOW OFF" displays on the LCD .

⚠ The follow me mode only works when the GPS (both on transmitter and on drone) has no less than 6 satellites.
The follow me mode will be exited when you push/press any keys on transmitter except the throttle.

7.5 FAILSAFE MODE

The quad copter will enter into failsafe mode when the connection is lost from the transmitter. The flight control system will control the quad copter to return to the HOME POINT and land automatically. The failsafe mode helps to aviod injuries or damages.

CONDITIONS WHICH ACTIVATE THE FAILSAFE MODE

(1) Transmitter is powered off.

(2) The flight distance is beyond the range of the transmitter's signal transmission.

(3) The transmitter's signal was interrupted by some other strong electronic interference.

⊘
- To ensure that the X4 can return safely to its home point when signal is lost, fly the X4 in safe flight area.
- If the quantity of GPS satellites drops below six for more than 20 seconds while the X4 is returning home, the X4 will descend automatically.
- The X4 will not avoid obstacles automatically while in failsafe mode.

©2016 Hubsan

8. TRANSMITTER

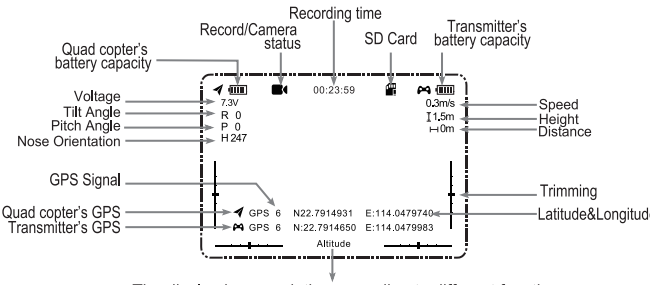

The display keep updating according to different functions
(eg:GPS Hold,Return Home,Follow me, Expert)

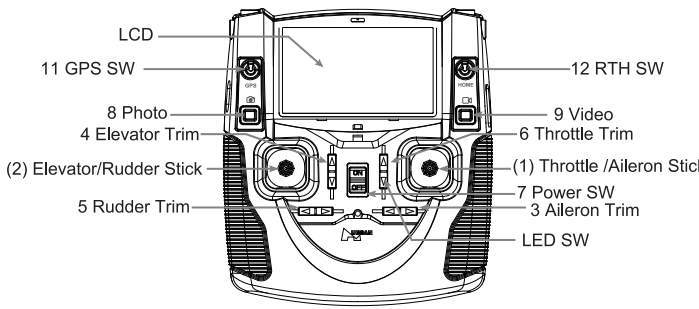

(MODE 1)

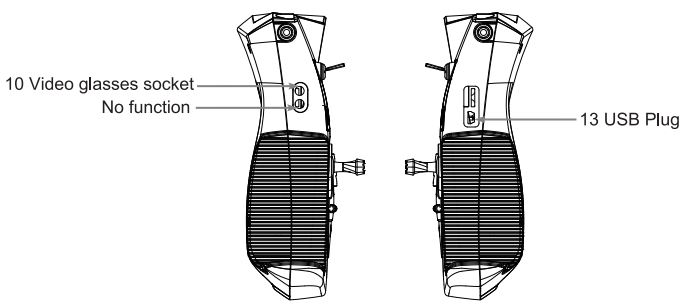

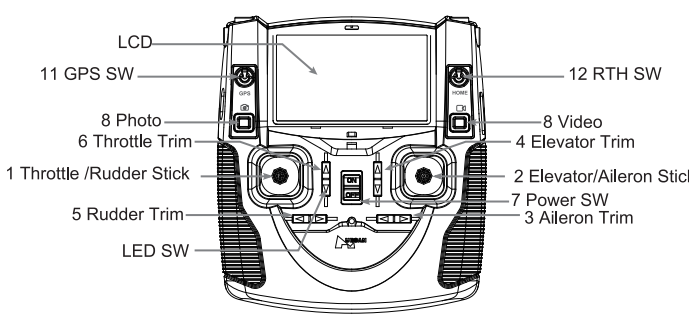

(MODE 2)

©2016 Hubsan

8.1 INPUT KEY FUNCTION

S/N	Mode/ Control	Function
(1)	**MODE 1** Throttle/Aileron Stick	Push the stick forward or backward and the quadcopter will ascend or decend; Push the stick left or right and the quadcopter will fly left or right.
(2)	**MODE 1** Elevator/Rudder Stick	Push the stick forward or backward and the quadcopter will fly forward or backward;Push the stick left or right and the quadcopter will rotate counter clockwise or clockwise.
1	**MODE 2** Throttle/ Rudder Stick	Push the stick forward or backward and the quadcopter will ascend or decend; Push the stick left or right and the quadcopter will rotate counter clockwise or clockwise.
2	**MODE 2** Elevator /Aileron Stick	Push the stick forward or backward and the quadcopter will fly forward or backward;Push the stick left or right and the quadcopter will fly left or right.
3	Aileron Trim	Aileron trim adjusts for left and right drift.
4	Elevator Trim	Elevator trim adjusts for forward and backward drift.
5	Rudder Trim	Rudder trim adjusts for drift of left and right rotation or yaw.
6	Throttle Trim	Throttle trim is normally at neutral. Long press the lower throttle trim to turn on/off LED indicators
7	Power Switch	Push to turn on the transmitter. Push again to turn off.
8	Photo	Press the photo button to shoot photos.
9	Video	Press video button to start recording and press again to stop.
10	Video glasses socket	Connect Hubsan video glasses (The video glass is not included)
11	GPS SW	Push the switch up, the bulit-in GPS will calculate the quad copter's position and height and help to keep the quad copter in a stable hover (ONLY FOR OUTDOORS)
12	RTH SW	Push the switch up, the quad copter will return to the home point automatically (ONLY FOR OUTDOORS)
13	USB Plug	For upgrading the software

©2016 Hubsan

8.2 INSTALL THE TX BATTERY

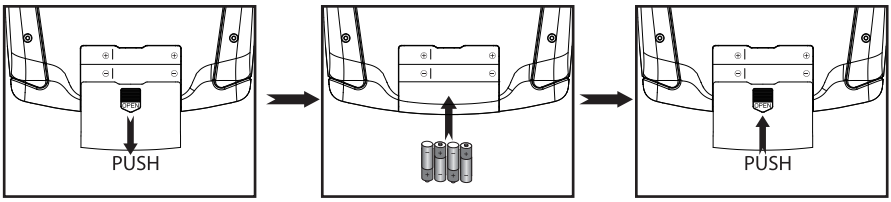

Remove the cover | Install 4 x AA batteries according to the correct polarities | Close the cover

- Do not mix old and new batteries
- Do not mix different types of batteries
- Do not charge non-rechargeable battery.

8.3 REVERSING CHANNEL SETUP

If you would like to reverse any of the stick functions due to personal preference then follow the instructions below. Be aware that it will change the controls back to front.

Pull the throttle stick to the lowest position and long press the Pitch stick simultaneously to enter into MAIN MENU interface. Push the Elevator stick up/down to select “Set Reverse”. Select “Exit” to exit.

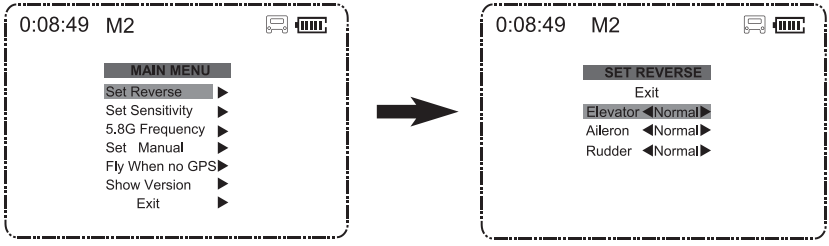

8.4 SENSITIVITY SETUP

If you would like to change the sensitivity of any of the stick functions then follow the instructions below.

Pull the throttle stick to the lowest position and long press the Elevator stick to enter into the MAIN MENU interface. Push the Elevator stick up/down to select “Set Sensitivity”, push the stick right to enter into the “ set sensitivity” interface, select “Expert mode” or “ Normal mode”. Select” Exit” to exit.

©2016 Hubsan

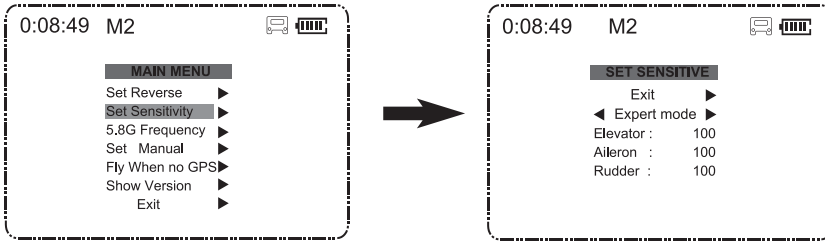

Sensitivity default setting is in Expert Mode.
The quadcopter can't be disarmed when sensitivity value less than "60".

8.5 MANUAL MODE SETUP

If you would like to make acrobatic flights, such as throwing, please switch off the GPS function and follow the instruction below to enter into the Manual mode

Pull the throttle stick to the lowest position and long press the Elevator stick to enter into the MAIN MENU interface. Push the Elevator stick up/down to select "Set Manual", push the stick right to enter into the " SET MANUAL" interface, select "ON" (without altitude function) or "OFF" (with altitude function).Select" Exit" to exit.

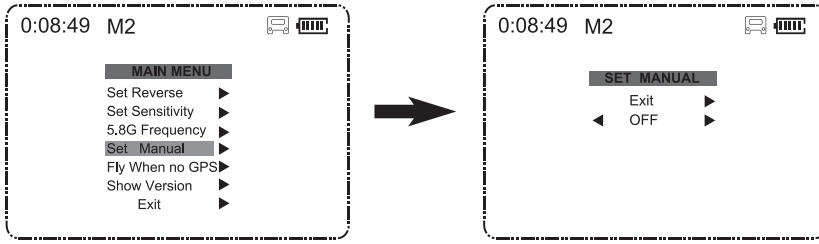

Manual Mode default setting is OFF.

Notice:

1. When the power on the transmitter runs low, the red LED will blink quickly and the LCD screen will turn black, also the transmitter and X4 may disconnect. Please replace with new batteries.
2. If the batteries in the transmitter runs low while flying the X4, you can still control the X4, please land the X4 and then replace batteries.
3. The Transmitter can only use 2S Lipo batteries, 4XAA batteries or NI-MH AA batteries, other batteries will damage the Transmitter.

©2016 Hubsan